WRECK OF THE PANDORA Deck Plan

copyright © 1982 SPI.
SPI grants limited permission to make personal copies of this diagram (not for sale or distribution).

FILE NAME (if saved)_____

Remove from booklet by bending staples.

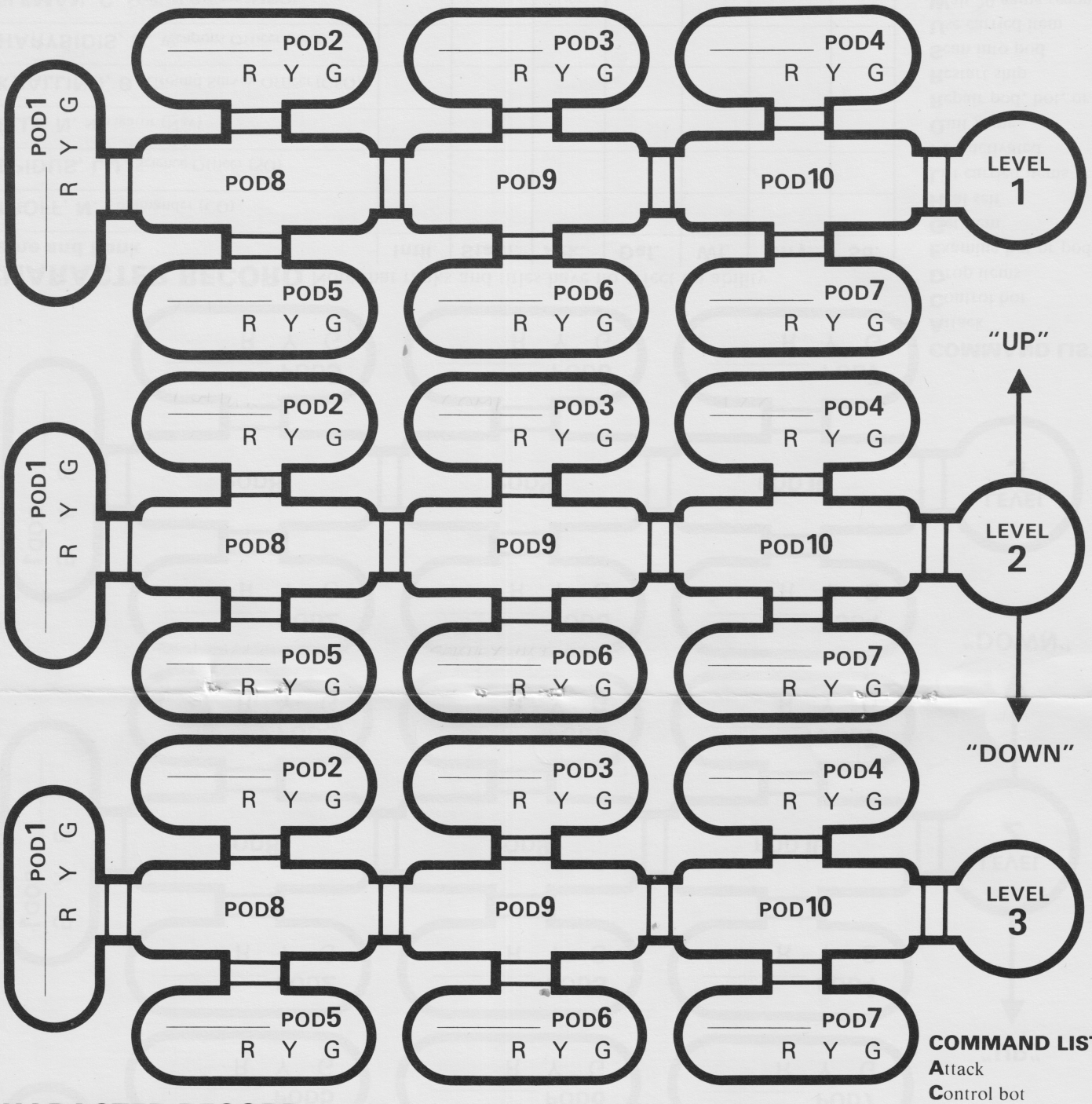

CHARACTER RECORD

Note that ranks and titles have no effect on ability

Name and Rank	Intll.	Stam.	Atk.	Def.	Wt.	Crry.	Sd.
STROFF, N. Commander (CO)							
GEPIDUS, L.J. Science Officer (SO)							
KELLY, N. Navigator (Nav)							
SKRALLING, B. Ground Survey Officer (GSO)							
CHARYBIDIS, H. Weapons Officer (WO)							
TELEMAN, C. Medical Officer (MDO)							
MARKMAR, O. Maintenance Officer (MNO)							

COMMAND LIST

Attack
Control bot
Drop items
Examine bot or pod
Get item
Heal self
List carried items
Pod activated
Quit game
Repair pod, bot, or item
Restart ship
Scan into pod
Use carried item
Wait 20 game seconds
X-data readout
1 to **8** direction of move

WRECK OF THE PANDORA Deck Plan

copyright © 1982 SPI.
SPI grants limited permission to make personal copies of this diagram (not for sale or distribution).

FILE NAME (if saved)_____

Remove from booklet by bending staples.

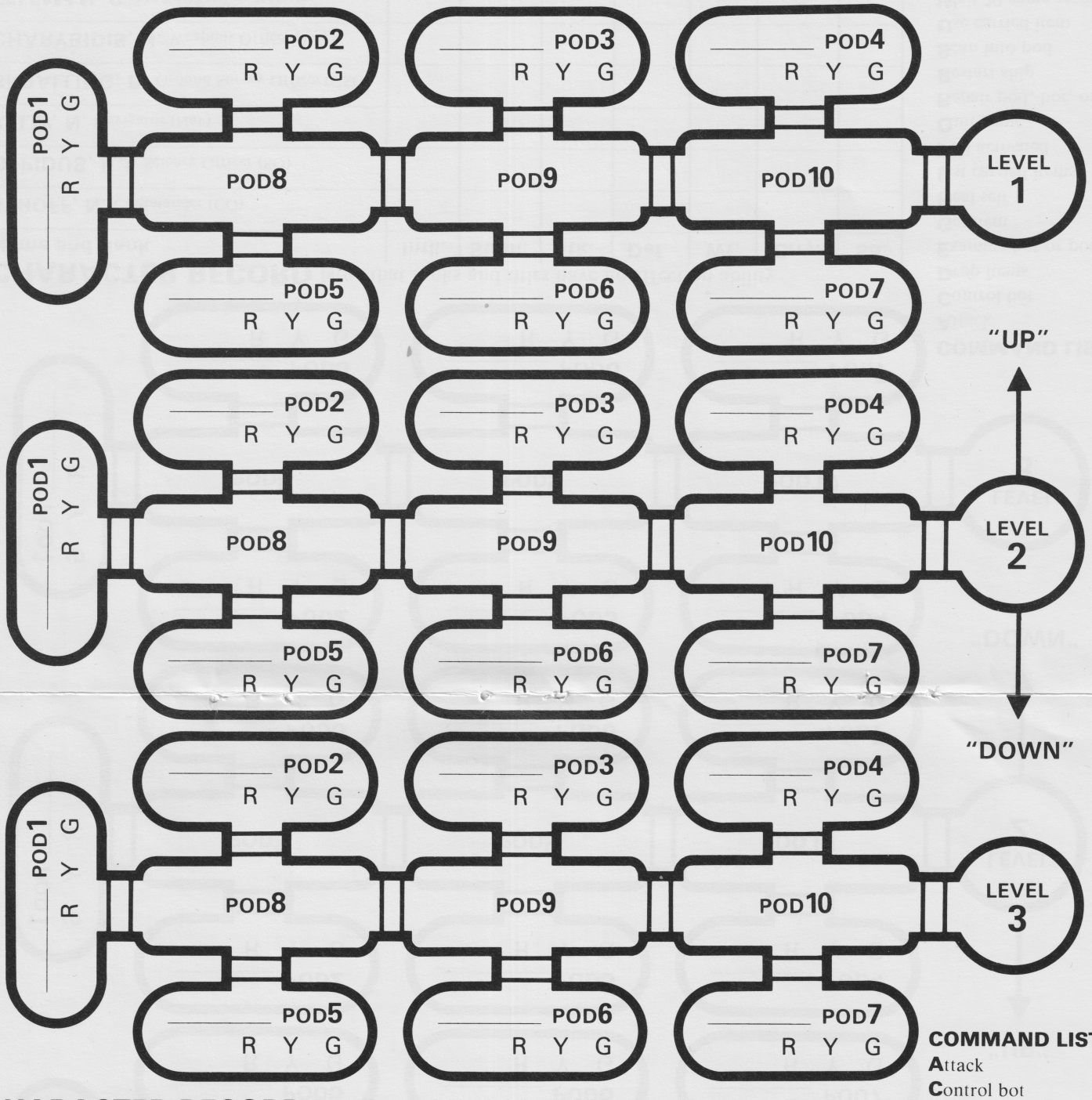

CHARACTER RECORD

Note that ranks and titles have no effect on ability

Name and Rank	Intll.	Stam.	Atk.	Def.	Wt.	Crry.	Sd.
STROFF, N. Commander (CO)							
GEPIDUS, L.J. Science Officer (SO)							
KELLY, N. Navigator (Nav)							
SKRALLING, B. Ground Survey Officer (GSO)							
CHARYBIDIS, H. Weapons Officer (WO)							
TELEMAN, C. Medical Officer (MDO)							
MARKMAR, O. Maintenance Officer (MNO)							

COMMAND LIST

Attack
Control bot
Drop items
Examine bot or pod
Get item
Heal self
List carried items
Pod activated
Quit game
Repair pod, bot, or item
Restart ship
Scan into pod
Use carried item
Wait 20 game seconds
X-data readout
1 to **8** direction of move